RoHS Compliant

REV.	DESCRIPTION	SIGN	DATE
A	NEW	RuoBiaoLing	2020/12/17

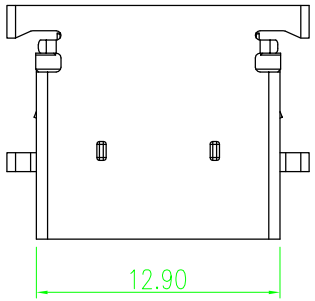

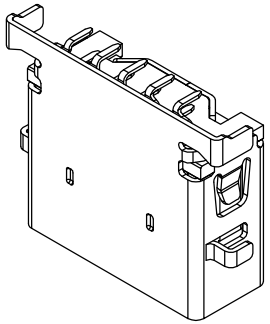

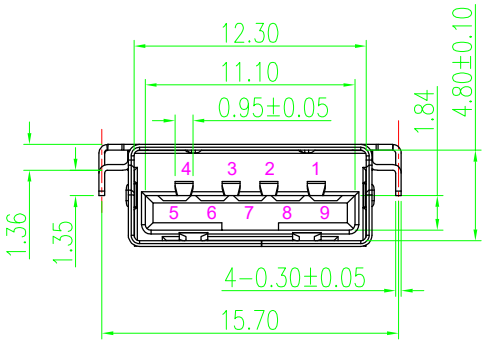

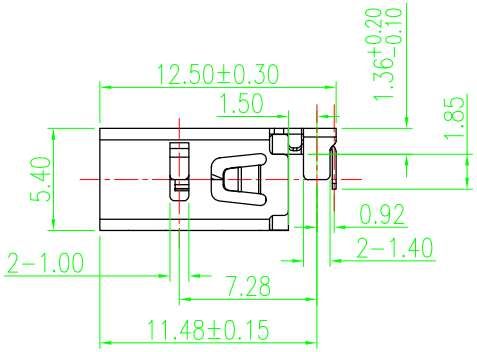

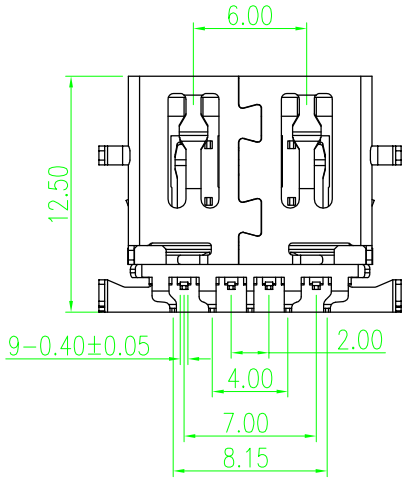

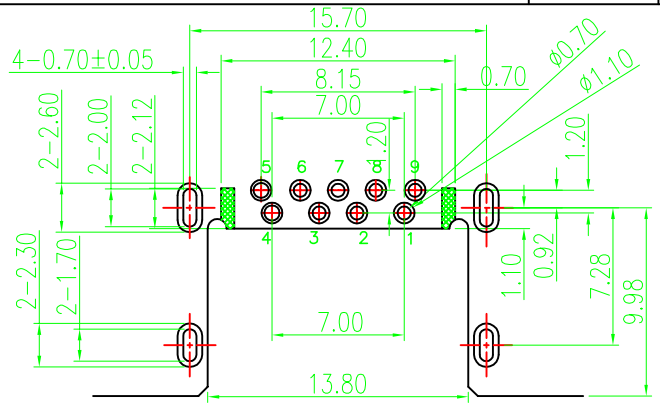

TOLERANCE: ±0.05, THICKNESS: 1.0~1.2mm
RECOMMENDED PCB LAYOUT
(TOP VIEW)
KEEP OUT AREA

NOTES:

1.ELECTRONIC:
- CONTACT CURRENT RATING: 1.5A
- CONTACT RESISTANCE: 30mohm MAX
- INSULATION RESISTANCE: 1000 Mohm MIN
- WITHSTAND VOLTAGE: AC 500V,1min.

2.MECHANICAL:
- MATING FORCE: 35N Max
- UNMATED FORCE: 8N Min.

3.ENVIRONMENT CHARACTERISTICS:
- OPERTING TEMPERATURE: -40°C TO +85°C

MATERIAL LIST:

No.	PART NAME	QTY	MATERIAL	REMARK
3	SHELL	1	SUS201	NI PLATED
2	CONTACT	9	COPPER ALLOY	AU/TIN PLATED
1	HOUSING	1	LCP	(UL94V-0) BLUE

GENERAL TOLERANCES (UNLESS SPECIFIED)		
ITEM	MM	INCH
3 PLACE	±0.15	±0.005
2 PLACE	±0.25	±0.01
1 PLACE	±0.35	±0.015
0 PLACE	±0.50	±0.02
ANGULAR ± 3°		
METRIC	U.S.	
MM	~~INCHES~~	

DRAWN BY RuoBiaoLing DATE 2020/12/17
CHECKED BY / DATE
APPROVED BY Fred.Tong DATE 2020/12/17
ANGLE OF PROJECTION

EDOM ELECTRONICS
TEL: +86 0755 27801940
Mob: +86 15889397634
www.techedom.com

TITLE: USB3.0 AF 90度 DIP 反向 沉板1.36mm 脚长1.85MM L12.50

SIZE A4 | PART NO. EU09F2L3N12343SR
SCALE N/A | SHEEL 1 OF 1

THIS DRAWING CONTAINS INFORMATION THAT IS PROPRIETARY TO EDOM INCORPORATED AND SHOULD NOT BE USE WITHOUT WRITTEN PERMISSION

REV. A