RoHS Compliant

REV.	DESCRIPTION	SIGN	DATE
A	NEW	Fred.Tong	19/06/18

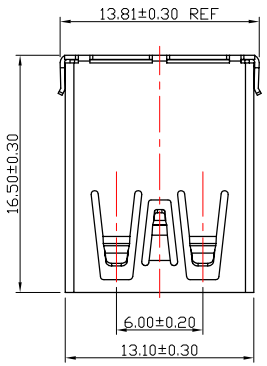

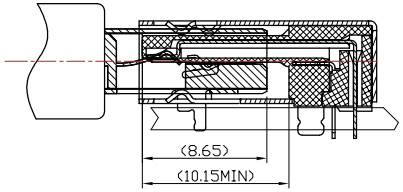

Mating Drawing

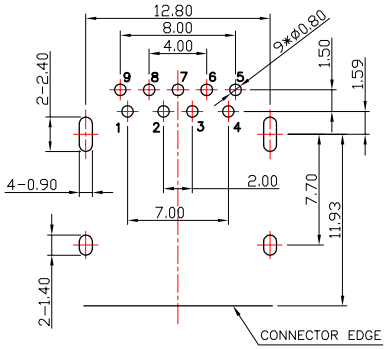

THICKNESS: 1.60mm REFERENCE PCB LAYOUT(±0.05)

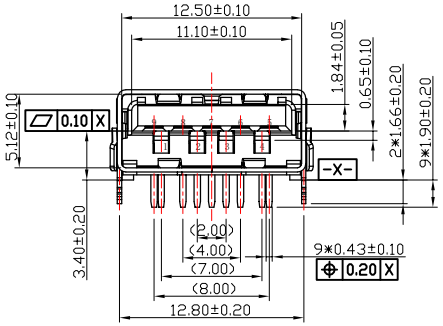

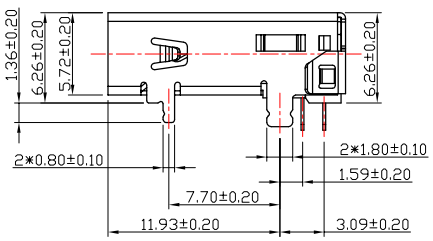

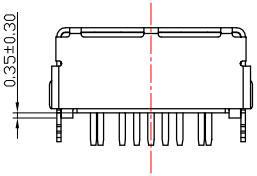

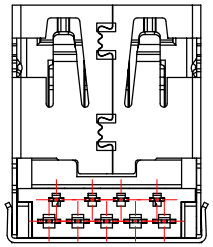

NOTES:

1.ELECTRONIC:
- CONTACT RESISTANCE: 30mohm MAX
- INSULATION RESISTANCE: 1000 Mohm MIN
- WITHSTAND VOLTAGE:AC 500V,1min.

2.MECHANICAL:
- DURABILITY: 5000 CYCLE.

3.ENVIRONMENT CHARACTERISTICS:
- OPERTING TEMPERATURE:-55°C TO +105°C

4.RECOMMANDER PCB THICKNESS 1.2 TO 1.60MM

5.PART NO:

No.	PART NAME	QTY	MATERIAL	REMARK
5	SHELL	1	STAINLESS STEEL	NI PLATED
4	5PIN	5	COPPER ALLOY	AU/TIN PLATED
3	4PIN	4	PHOSPHOR BRONZE	AU/TIN PLATED
2	COVER	1	THERMOPLASTIC(PA9T)	(UL 94V-0) BLUE/BLACK
1	HOUSING	1	THERMOPLASTIC(PA9T)	(UL 94V-0) BLUE/BLACK

GENERAL TOLERANCES (UNLESS SPECIFIED)

ITEM	MM	INCH
3 PLACE	±0.15	±0.005
2 PLACE	±0.25	±0.01
1 PLACE	±0.35	±0.015
0 PLACE	±0.50	±0.02
ANGULAR ± 3°		
METRIC	U.S.	
MM	~~INCHES~~	

DRAWN BY Alen.Yu	DATE 19/06/18	
CHECKED BY Liang.Li	DATE 19/06/18	
APPROVED BY Fred.Tong	DATE 19/06/18	

ANGLE OF PROJECTION

EDOM ELECTRONICS
TEL: +86 0755 27801940
Mob: +86 15889397634
www.techedom.com

TITLE: USB 3.1 Gen2 AF 90度DIP CH3.4 直脚

SIZE A4 | PART NO. EU09FB3N12295

SCALE N/A | SHEEL 1 OF 1

THIS DRAWING CONTAINS INFORMATION THAT IS PROPRIETARY TO EDOM INCORPORATED AND SHOULD NOT BE USE WITHOUT WRITTEN PERMISSION

REV. A