REV	ECN NO	DESCRIPTION	DATE	APPROVED
A	-	NEW RELEASED	2022.01.05	MAY.YU

Customer drawing

RoHS

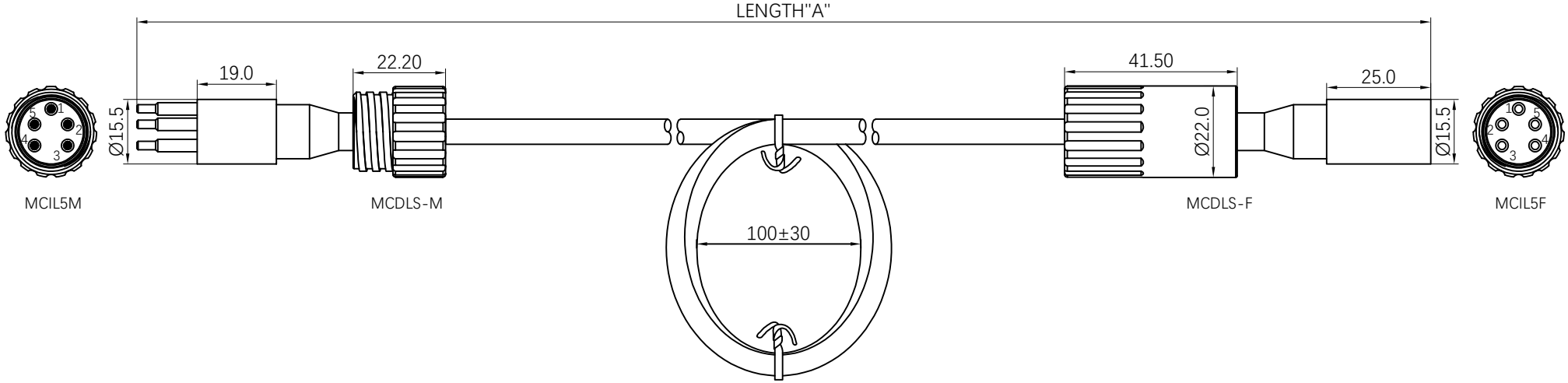

Connector specifications:

Voltage rating:	300V DC/AC rms
Current rating:	5A per contact(max 10A per connector)
Insulation resistance:	≥200 MΩ
Contact resistance:	<0.01 Ω
Durability:	≥500 Times Cycles.
Temperature rating (water):	-4°C to +60°C
Temperature rating (air):	-40°C to +60°C
Storage temperature rating:	-40°C to +60°C
Qualified pressure tested:	800bar, 11600psi, 80MPA (8 kilometers underwater)

Material specifications:

Connector body:	Chloroprene rubber
Contacts:	Male pins in gold plated beryllium copper Female sockets in gold plated brass
Snap rings:	Stainless steel
O-rings:	Nitrile rubber
Locking sleeves:	POM, Red

Cable specifications:
20AWG 5Conductor, OD7.9mm, Chloroprene rubber cable, Black

UNMARKED TOLERANCES	
DIMENSIONS	TOLERANCE
x.	±0.5
x.x	±0.25
x.xx	±0.15
0 to 500	+15 / -0
> 501	+3%/-0 of length
ANGLES	
x°	±1°

TITLE MCIL5M TO MCIL5F MICRO CONNECTOR UNDERWATER CABLE ASSEMBLY

EDOM ELECTRONICS
TEL: +86 0755 27801940
Mob: +86 15889397634
www.techedom.com

CUSTOMER	-	CUSTOMER PART NO.	-		
DRAWN BY	MAY.YU	PART NUMBER	MCIL5M-MCIL5F-L*	SIZE A4	REV A
CHECKED BY	BILL.LEE	DRAWING NUMBER	MCIL5		
APPROVED BY	TIGER.WANG	SCALE FREE	ALL DIMENSION UNIT IN MM	SHEET 1 OF 1	